ADD INNOVATION SUPPLIER

Installation Instruction

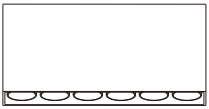

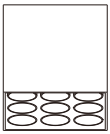

CAUTIONS :

1.Switch-off the power supply before any installation and maintenance operations.
2.Installaion should be carried out by a suitably qualified person in accordance with good electrical practice and the appropriate national wiring regulations.
3.Connect this lighting according to voltage and frequencies mention on driver.

INSTALLATION :

1

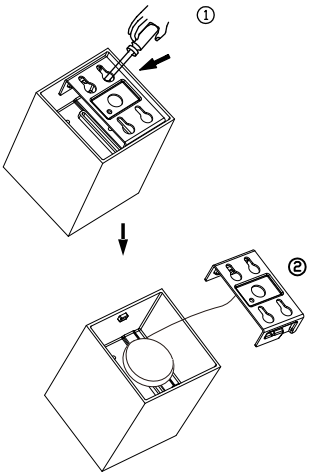

2

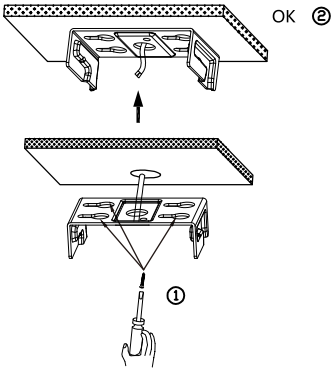

3

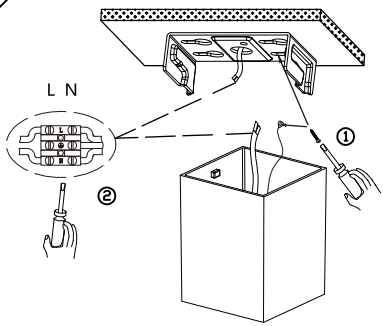
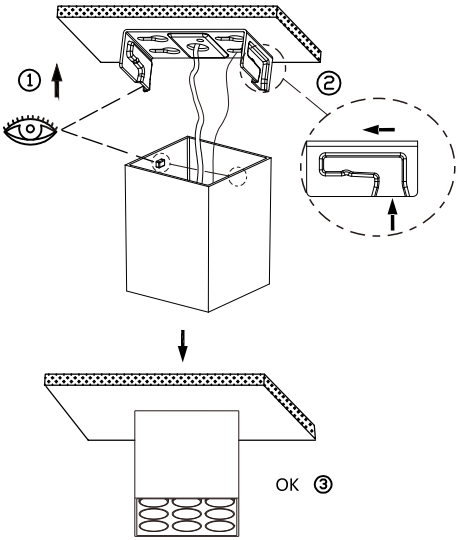
4